| REV. | PART NO. |
|---|---|
| | |

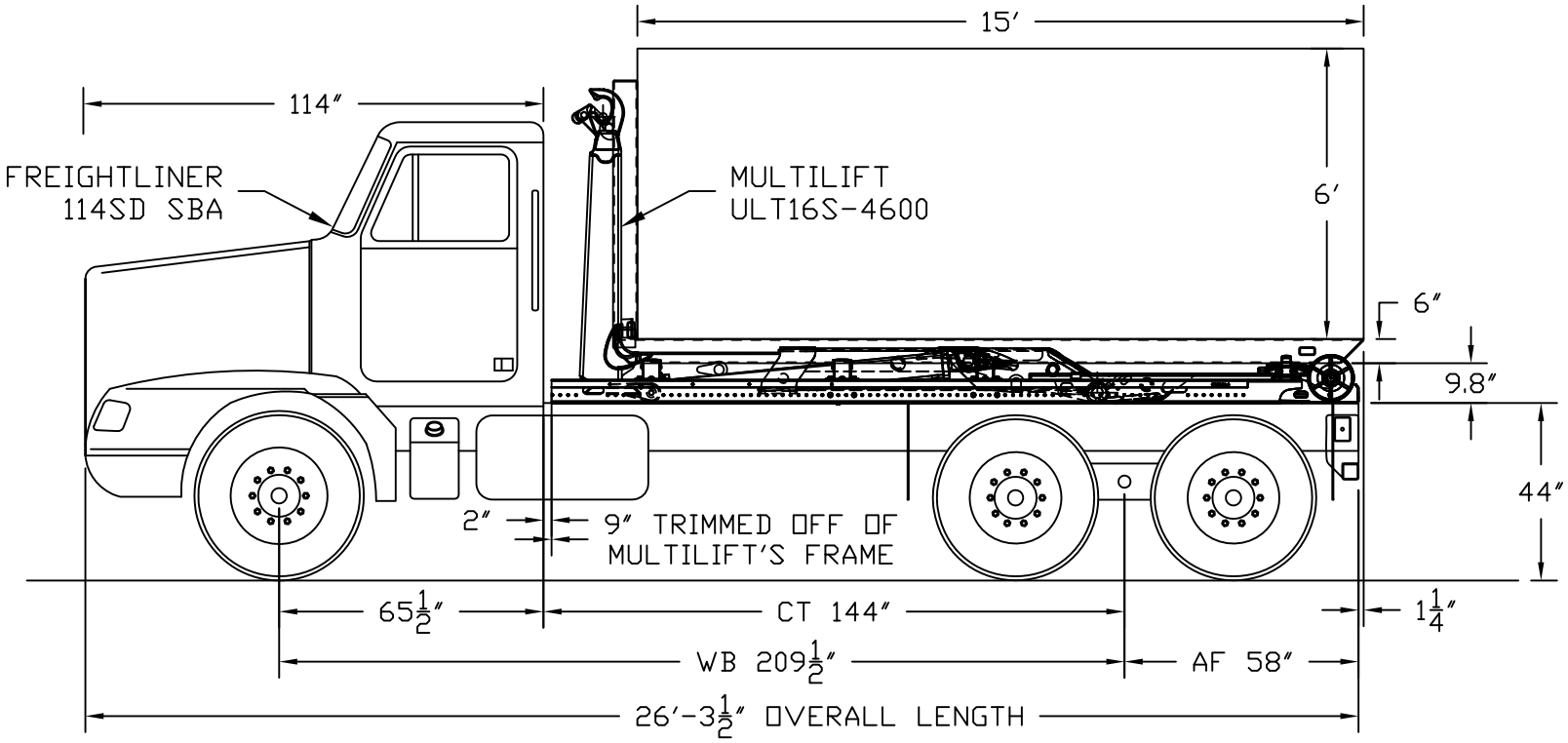


SCALE 0 12 24 36 48 60 72 84 96 108

**NOTICE:**

THIS DRAWING WAS INTENDED FOR ILLUSTRATION PURPOSES ONLY. IT IS NOT A WEIGHT DISTRIBUTION DRAWING. NOTE THAT IT IS THE CUSTOMER'S AND/OR INSTALLER'S RESPONSIBILITY TO ENSURE THE COMPLETED PACKAGE MEETS ALL LOCAL AND FEDERAL GUIDELINES.


Hiab, Inc.

Hiab, Inc.
12233 Williams Road
Perrysburg, Ohio 43551
Tel (419) 482-6000
Fax (419) 482-6001


Tolerance – unless otherwise noted.
Tolerances are in inches

| | | |
|---|---|---|
| 2-PLACE | ±.00..... | .03 |
| 3-PLACE | ±.000.... | .015 |
| ANGULAR | ± | .....1° |
| FRACTIONAL | ± | .....1/16" |

Break all sharp corners unless otherwise specified.


THIS PROPERTY AND ALL INFORMATION THEREIN IS THE PROPERTY OF HIAB, INC., 12233 WILLIAMS RD, PERRYSBURG, OHIO 43551 AND IS CONFIDENTIAL. IT MUST NOT BE MADE PUBLIC OR COPIED. THIS DRAWING IS LOANED TO RETURN UPON DEMAND AND SHALL NOT BE USED DIRECTLY OR INDIRECTLY IN ANY WAY DETRIMENTAL TO OUR INTERESTS. OUR PRIOR SPECIFIC APPROVAL IS REQUIRED FOR EXPOSURE OF THIS DRAWING TO OTHERS FOR ANY PURPOSE.


| | | | | | |
|---|---|---|---|---|---|
| Drawing Title: MULTILIFT ULT16S-4600 | | | | | |
| Project Name: 15' BODY | | | | | |
| Next Assy. MULTILIFT/SALES | Drawn by: SMG | Date: 9-28-20 | Size: | Part No. | |
| Dwg/Cad file no. | Approval: | Date Approved: | Scale: | unit wt. | Eng. job no.: |